06LYH482

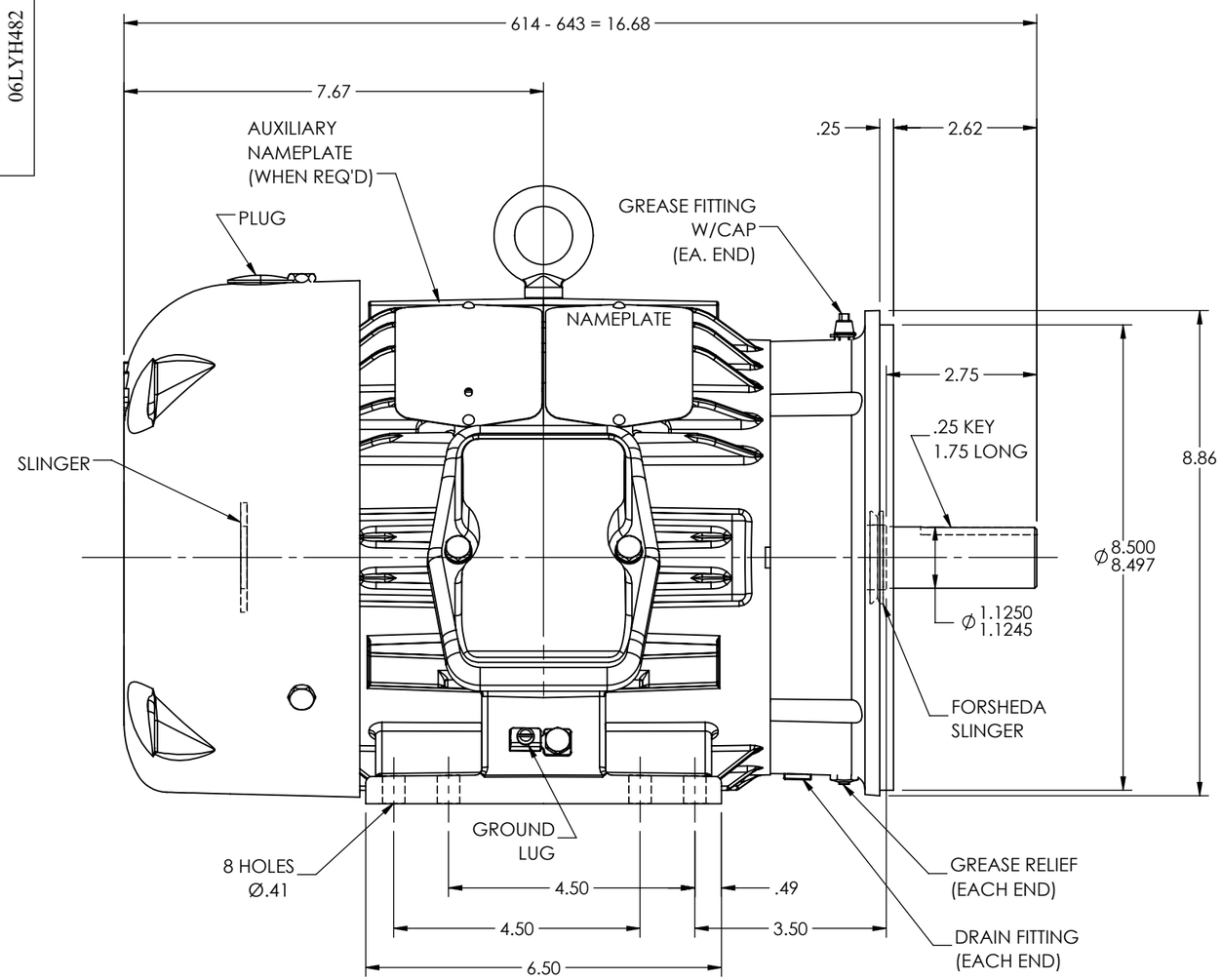

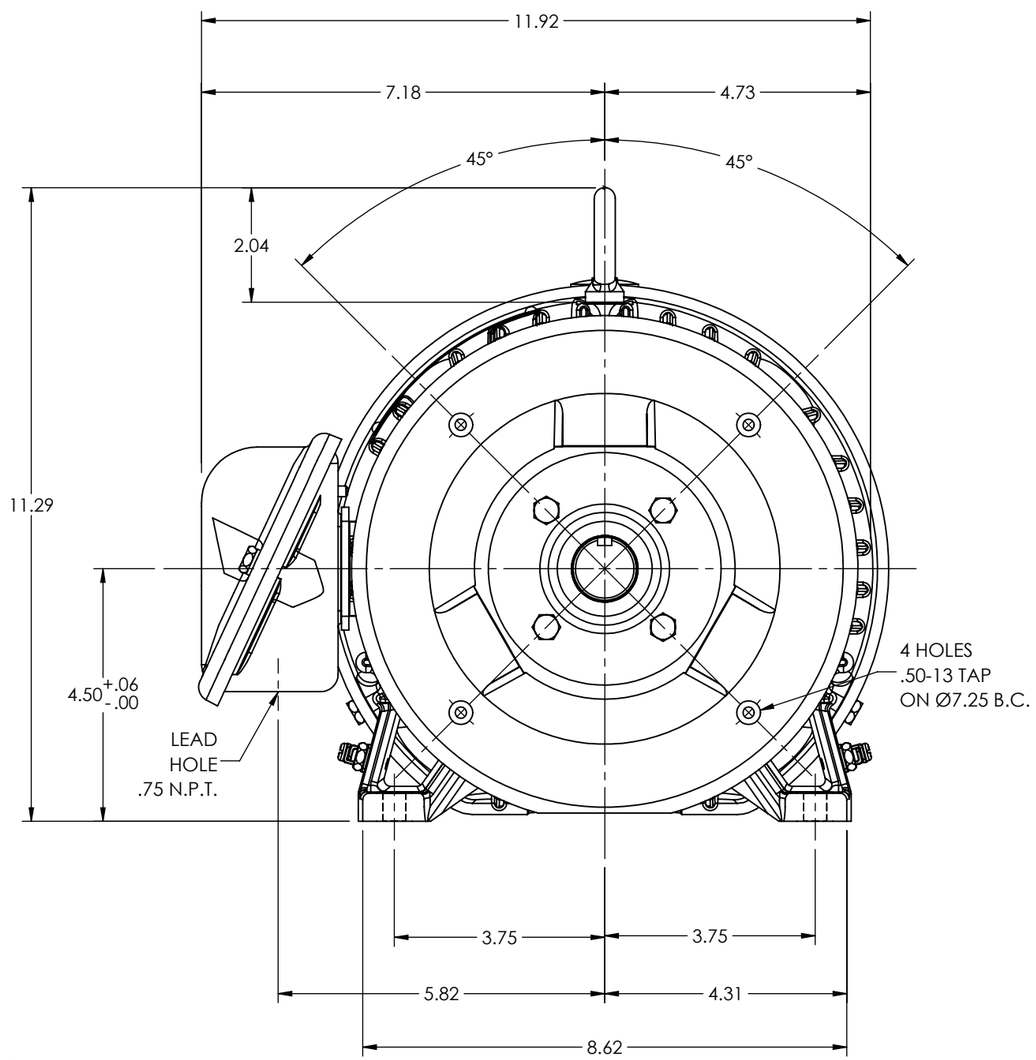

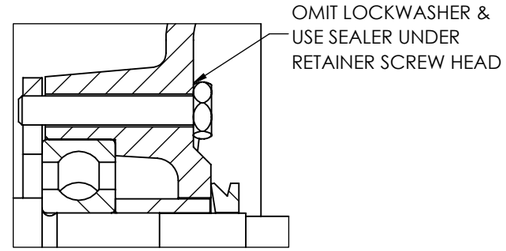

PULLEY END DETAIL

CUSTOMER IS RESPONSIBLE FOR DETERMINING THAT THE PRODUCT WILL PERFORM SUITABLY IN THE INTENDED APPLICATION

REV. DESC: SHOVE ADD NP WHEN REQ'D			
REV: E	VERSION: 05	REVISED: 08:55:38 10/09/2020	TDR: 000001150783
MODEL NO. 06LYH482			REF: -
BY: USFRHAR			B

BALDOR - RELIANCE®

STD HORZ 182-4TC TEFC M CP W/6206 BRGS, LIPPED KOBX LID

06LYH482